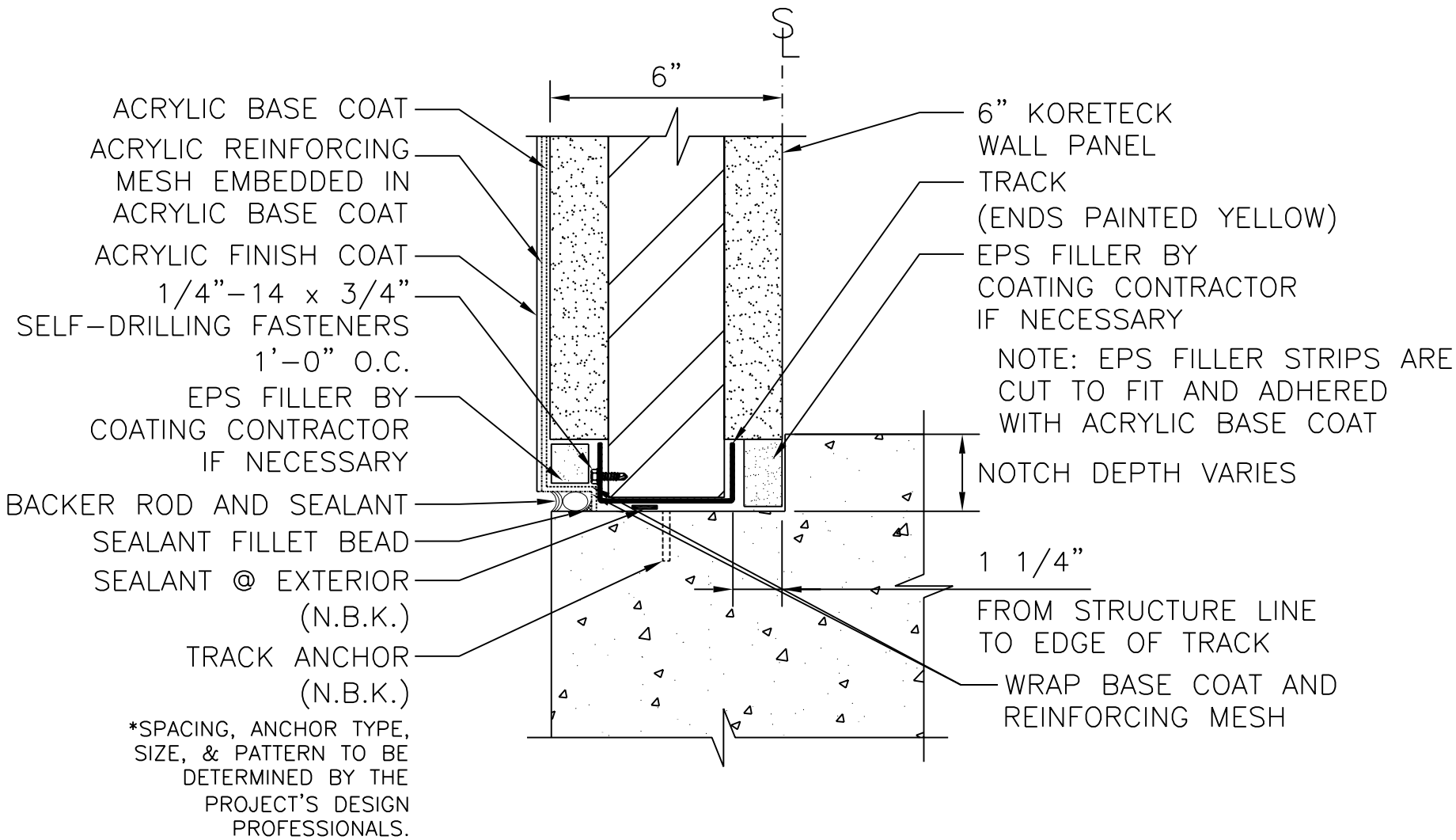

F603	NOTCHED BASE WITH ACRYLIC DETAIL	KORETECK®	REV DATE
			07/01/06